Module 2
Spanning Tree Protocol

ITNET03

Advanced Routing and Switching

Module Objectives

Module Title: Spanning Tree Protocol

Module Objectives:

- Explain common problems in a redundant, L2 switched network.
- Explain how STP operates and enables redundancy in a Layer 2 network.
- Explain how Rapid PVST+ improves the capabilities of STP in responding to network link failure

Module References:

- CCNAv7 SRWE – Modules 5, 10.5, 11.5

© 2016 Cisco and/or its affiliates. All rights reserved. Cisco Confidential

2.1 Purpose of STP

© 2016 Cisco and/or its affiliates. All rights reserved. Cisco Confidential

Redundancy at OSI Layers 1 and 2

- As businesses become increasingly dependent on the network, the availability of the network infrastructure becomes a critical business concern.
  - Redundancy is the solution for achieving the necessary availability.
  - Improves the reliability and availability of the network by implementing alternate network paths by adding equipment and cabling to eliminate a single point of failure.
  - Having multiple paths for data allows for a single path to be disrupted without impacting the connectivity of devices on the network.
  - Multiple cabled paths between switches provide physical redundancy in a switched network
  - Switched networks commonly have redundant paths and even redundant links between the same two devices.

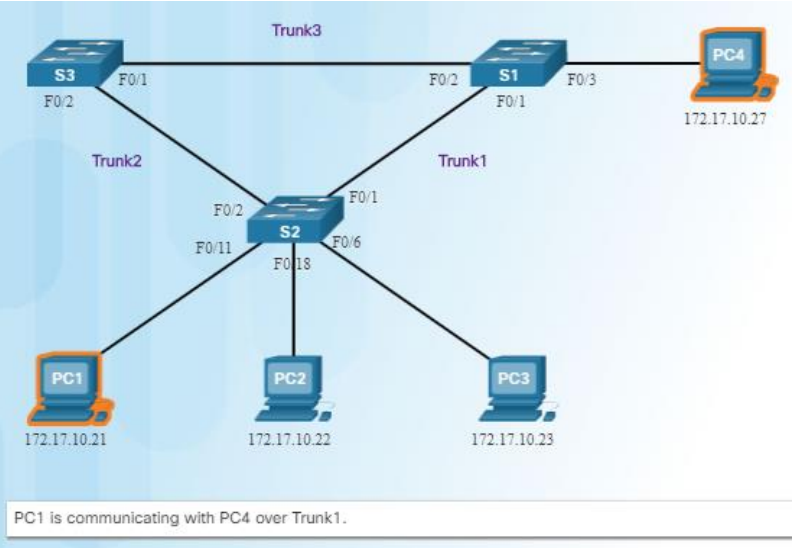

© 2016 Cisco and/or its affiliates. All rights reserved. Cisco Confidential

Issues with Layer 1 Redundancy: MAC Database Instability

Ethernet frames do not have a time to live (TTL) field like the Layer 3 IP header has. This means that Ethernet has no mechanism to drop frames that propagate endlessly.

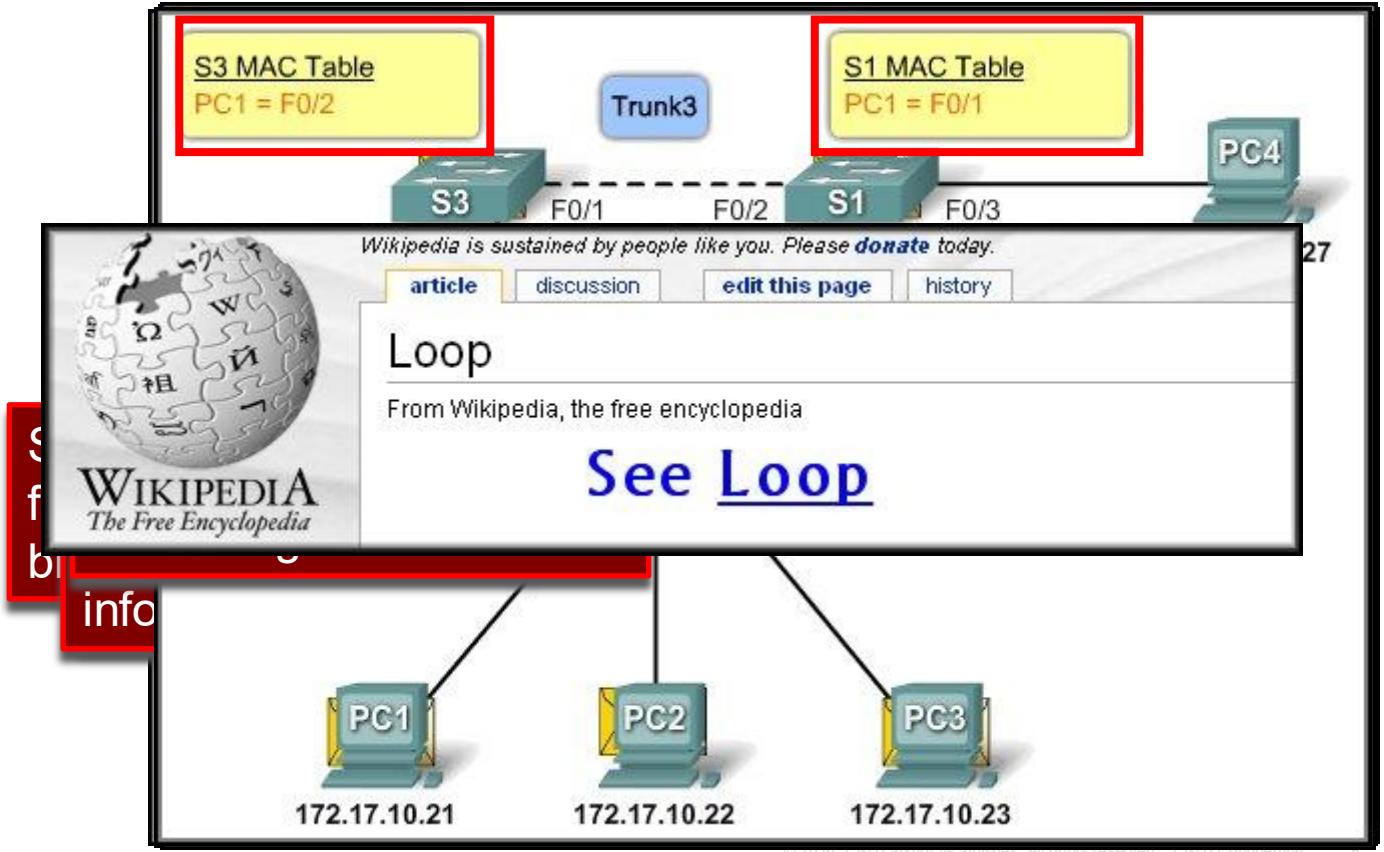

Issues with Layer 1 Redundancy: Broadcast Storms

- Recall: Layer 2 switches send broadcast frames out all ports.
- Too many broadcast frames in a Layer 2 loop will consume all available bandwidth and make the network unreachable for legitimate network traffic.
- Causes a denial of service (DoS) which can develop within seconds and bring the network down to halt

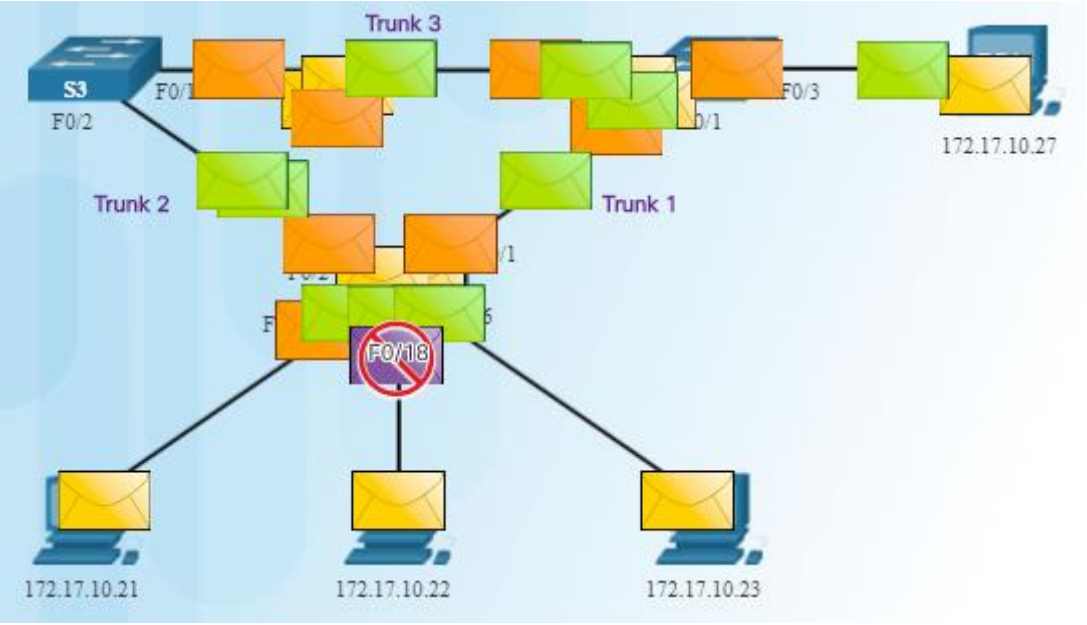

© 2016 Cisco and/or its affiliates. All rights reserved. Cisco Confidential

Issues with Layer 1 Redundancy: Duplicate Unicast Frames

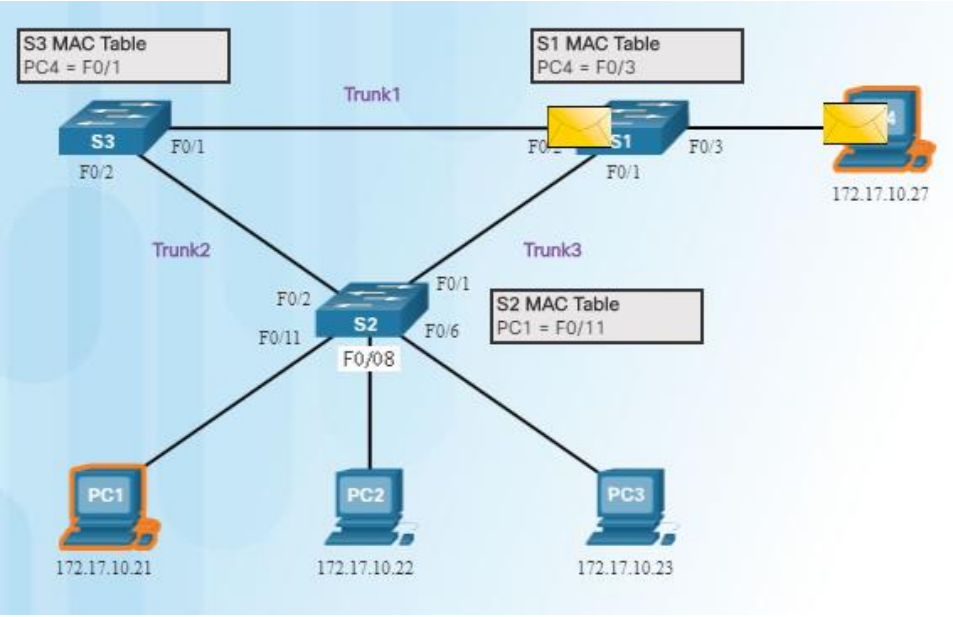

- An unknown unicast frame is when the switch does not have the destination MAC address in its MAC address table and has to broadcast the frame out all ports except the port the frame was received on (the ingress port).
- Unknown unicast frames sent onto a looped network can result in duplicate frames arriving at the destination device.

1. PC1 sends a frame destined for PC4.
2. S2 does not have PC4's MAC address in the MAC address table so it forwards the frame out all ports including the trunks to S1 and S3.
3. S1 sends the frame to PC4.
4. S3 also sends a copy of the frame over to S1 which delivers the same frame again to PC4.

© 2016 Cisco and/or its affiliates. All rights reserved. Cisco Confidential

Real-World Redundancy Issues

- Usually caused by an error in cabling.

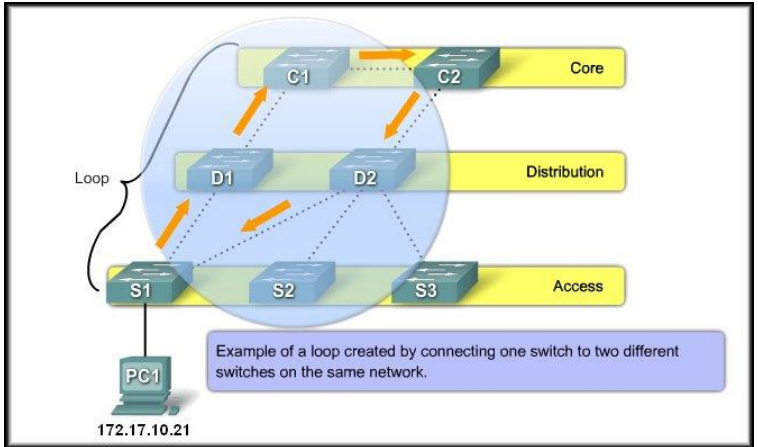

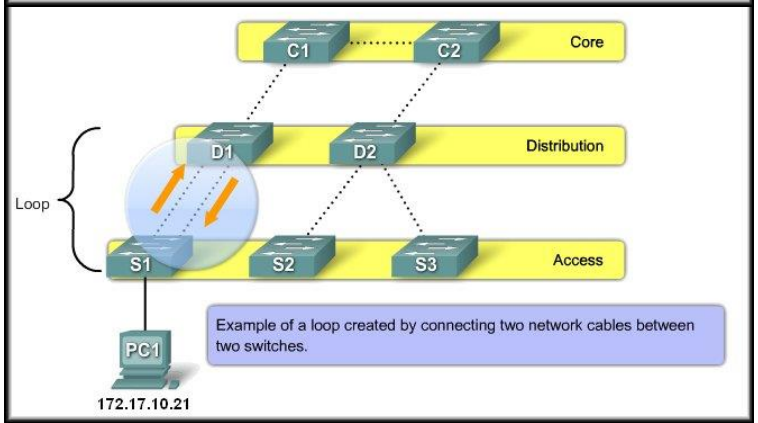

- Or users connecting unauthorized personal devices

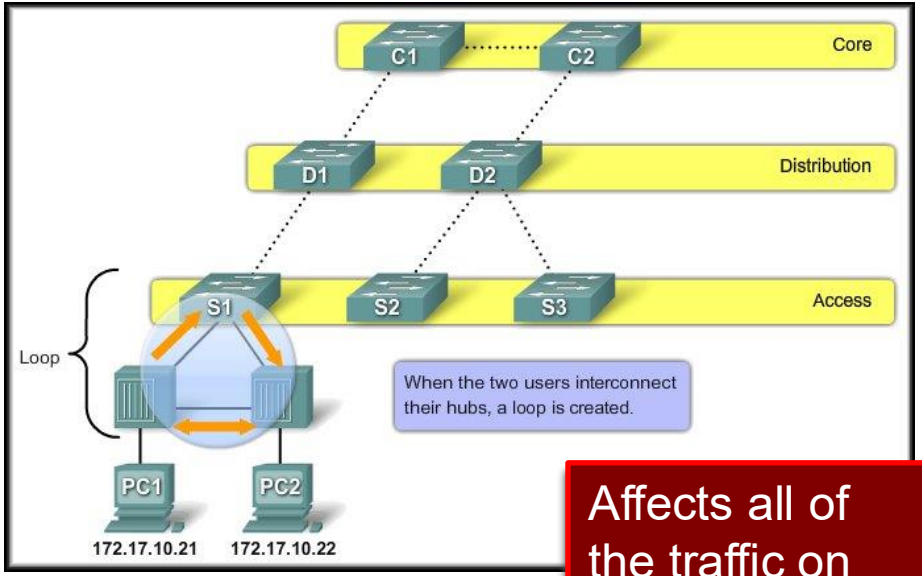

Affects all of the traffic on S1

© 2016 Cisco and/or its affiliates. All rights reserved. Cisco Confidential

Spanning Tree Algorithm: Introduction

- STP is based on an algorithm invented by Radia Perlman which creates a loop-free topology by selecting a single root bridge to which all other switches determine a single least-cost path.
- The Spanning Tree Protocol (STP) prevents loops in a switched network while still allowing redundant paths to exist in order to compensate for link failure
  - STP sends bridge protocol data unit (BPDUs) frames between Layer 2 devices in order to calculate the one logical path.
  - Redundant paths that can cause a loop are dynamically blocked
  - In the event of a failure on an active link, a previously blocked link can be unblocked to restore a working path

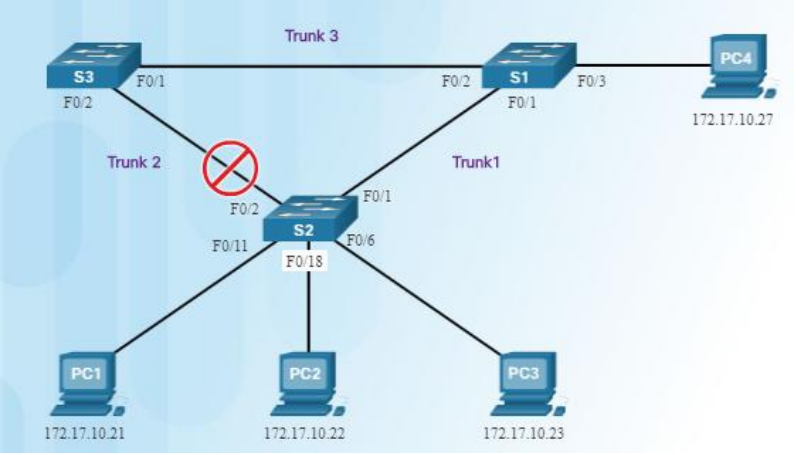

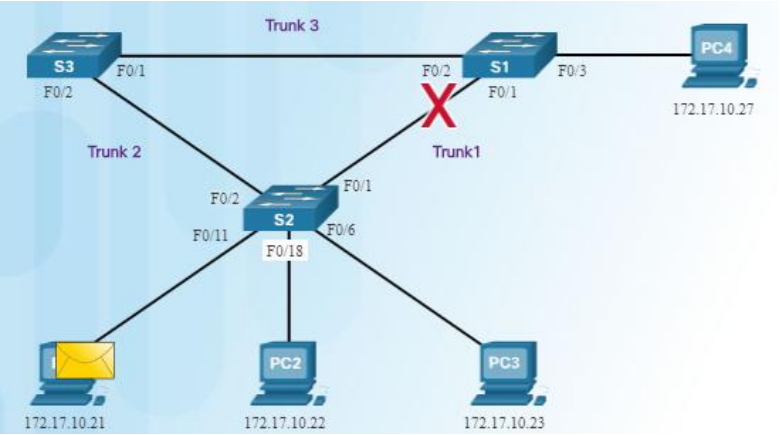

© 2016 Cisco and/or its affiliates. All rights reserved. Cisco Confidential

2.2 STP Operations

© 2016 Cisco and/or its affiliates. All rights reserved. Cisco Confidential

Steps to a Loop-Free Topology

STP uses the Spanning Tree Algorithm (STA) to determine which switch ports on a network need to be configured for blocking to prevent loops.

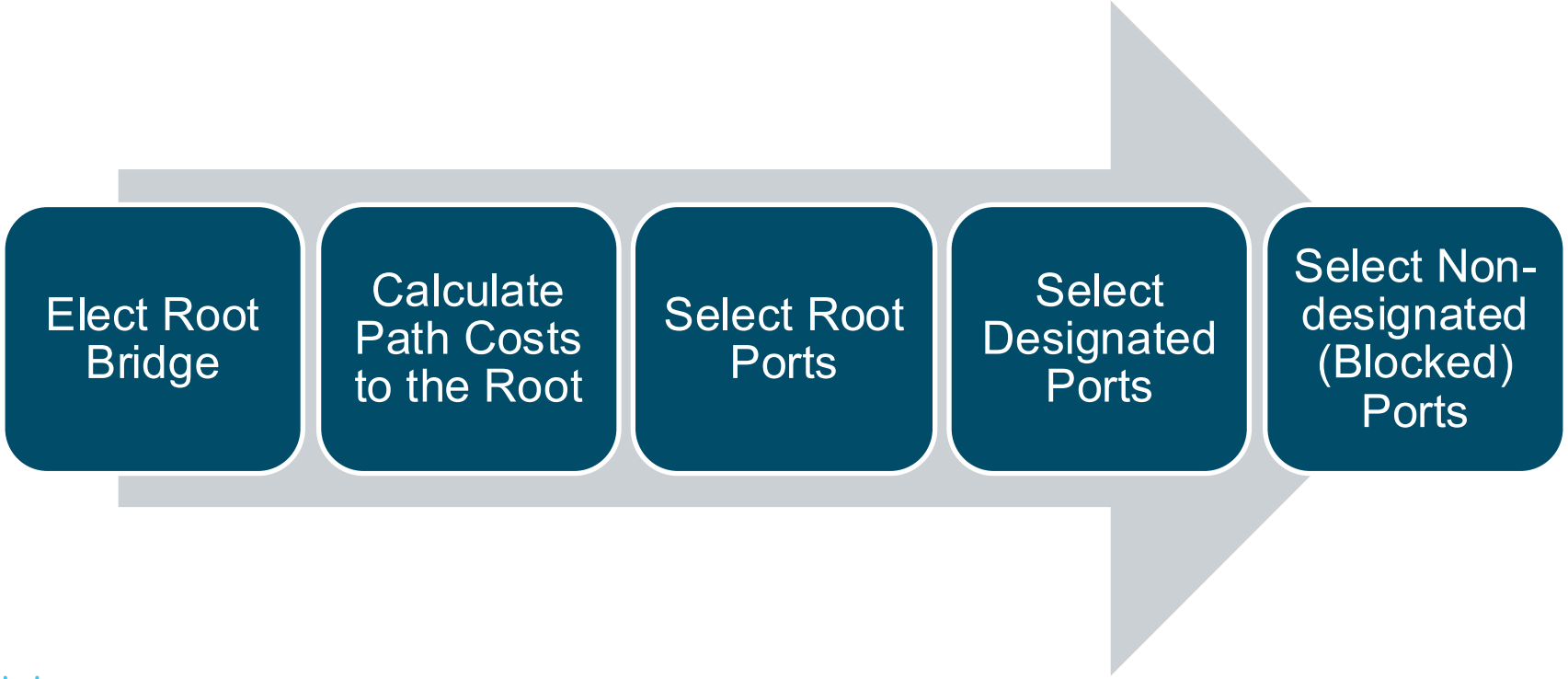

© 2016 Cisco and/or its affiliates. All rights reserved. Cisco Confidential

Bridge Protocol Data Units

- During STA and STP functions, switches use Bridge Protocol Data Units (BPDUs) to share information about themselves and their connections.
- Each BPDU contains a bridge ID (BID) that identifies which switch sent the BPDU.
- The BID is involved in making many of the STA decisions including root bridge and port roles.

Field #	Bytes	Field
1-4	2	Protocol ID
	1	Version
	1	Message type
	1	Flags
5-8	8	Root ID
	4	Cost of path
	8	Bridge ID
	2	Port ID
9-12	2	Message age
	2	Max age
	2	Hello time
	2	Forward delay

© 2016 Cisco and/or its affiliates. All rights reserved. Cisco Confidential

STA Step 1 – Electing the Root Bridge

- In the STA process, a single switch is designated as the root bridge through election and used as the reference point for all calculations.
- The election process is controlled by the Bridge-ID (BID) which is an identifier based on an assigned bridge priority value and the switch MAC address

© 2016 Cisco and/or its affiliates. All rights reserved. Cisco Confidential

STA Step 1 – Electing the Root Bridge

- After a switch boots, it assumes that it is the root bridge of the network
- A switch will send out Bridge Protocol Data Units (BPDU) frames containing the switch BID and the root ID every 2 seconds.
- When a switch receives a BPDU with a root ID lower than its own root ID, the receiving switch updates its root ID.

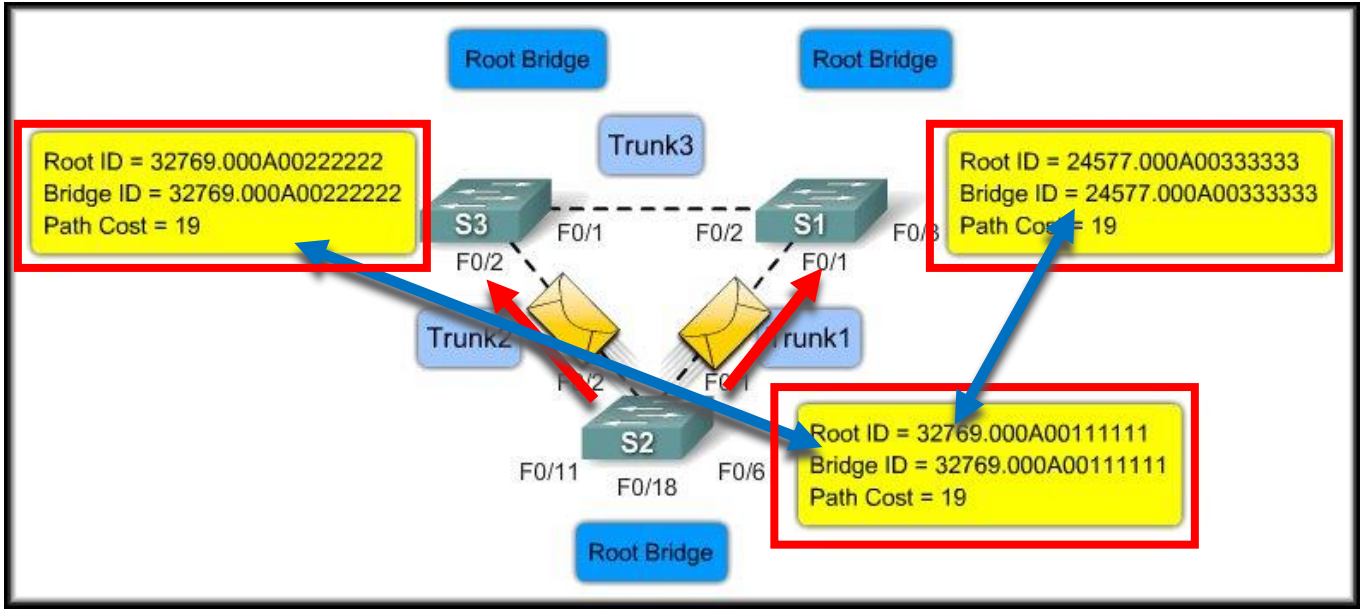

S3 believes S2 is the root bridge.
S1 still thinks it is the root bridge.

© 2016 Cisco and/or its affiliates. All rights reserved. Cisco Confidential

STA Step 1 – Electing the Root Bridge

- After a switch boots, it assumes that it is the root bridge of the network
- A switch will send out Bridge Protocol Data Units (BPDU) frames containing the switch BID and the root ID every 2 seconds.
- When a switch receives a BPDU with a root ID lower than its own root ID, the receiving switch updates its root ID.

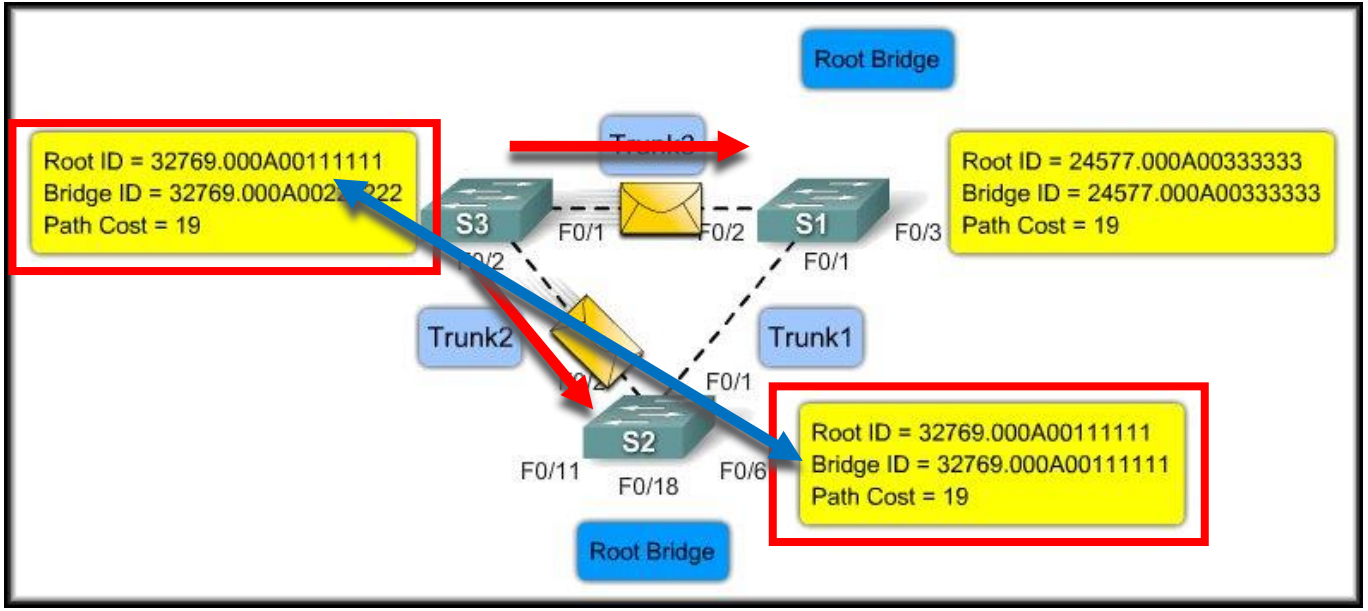

© 2016 Cisco and/or its affiliates. All rights reserved. Cisco Confidential

STA Step 1 – Electing the Root Bridge

- After a switch boots, it assumes that it is the root bridge of the network
- A switch will send out Bridge Protocol Data Units (BPDU) frames containing the switch BID and the root ID every 2 seconds.
- When a switch receives a BPDU with a root ID lower than its own root ID, the receiving switch updates its root ID.

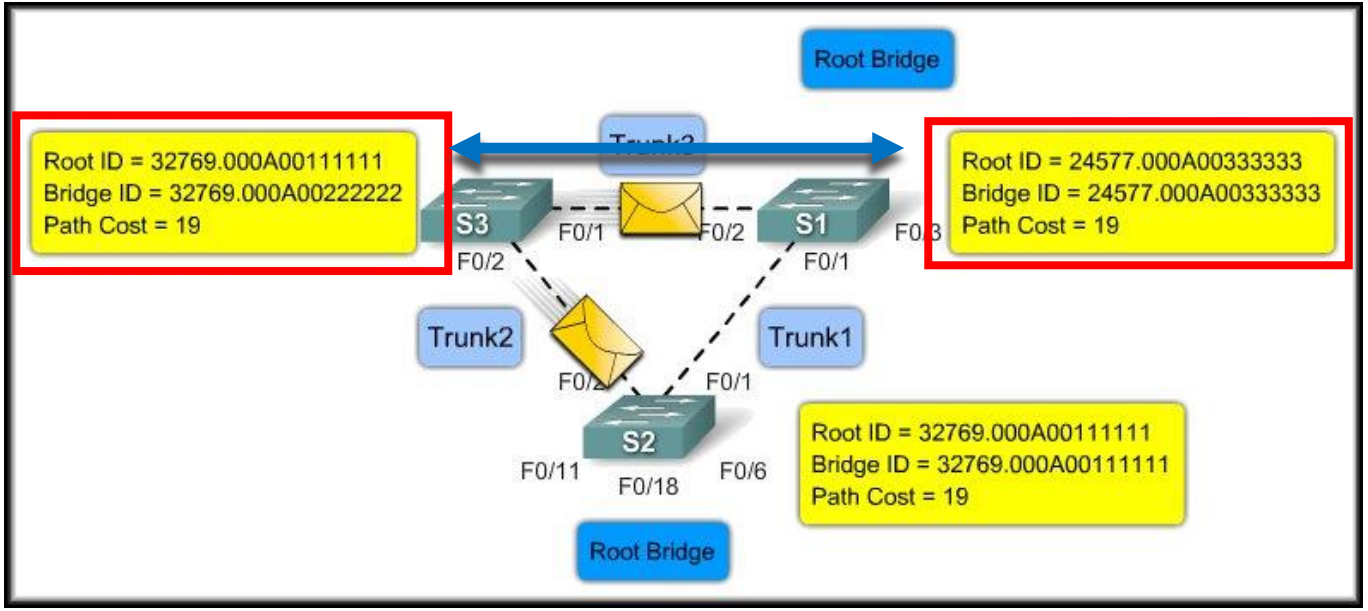

S2 and S1 both think that they are the root bridge.

© 2016 Cisco and/or its affiliates. All rights reserved. Cisco Confidential

STA Step 1 – Electing the Root Bridge

- After a switch boots, it assumes that it is the root bridge of the network
- A switch will send out Bridge Protocol Data Units (BPDU) frames containing the switch BID and the root ID every 2 seconds.
- When a switch receives a BPDU with a root ID lower than its own root ID, the receiving switch updates its root ID.

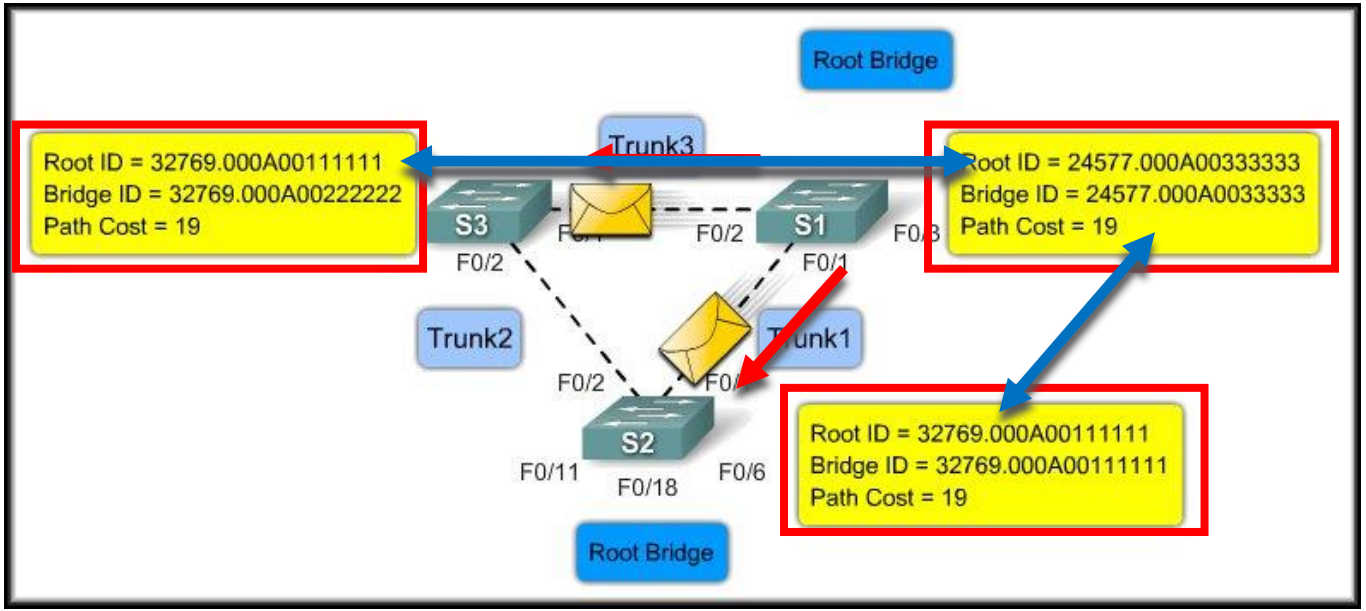

S3 recognizes S1 as the root.
S2 recognizes S1 as the root.

© 2016 Cisco and/or its affiliates. All rights reserved. Cisco Confidential

STA Step 1 – Electing the Root Bridge

- Eventually, all switches will recognize the switch with the lowest BID in the network as the root bridge

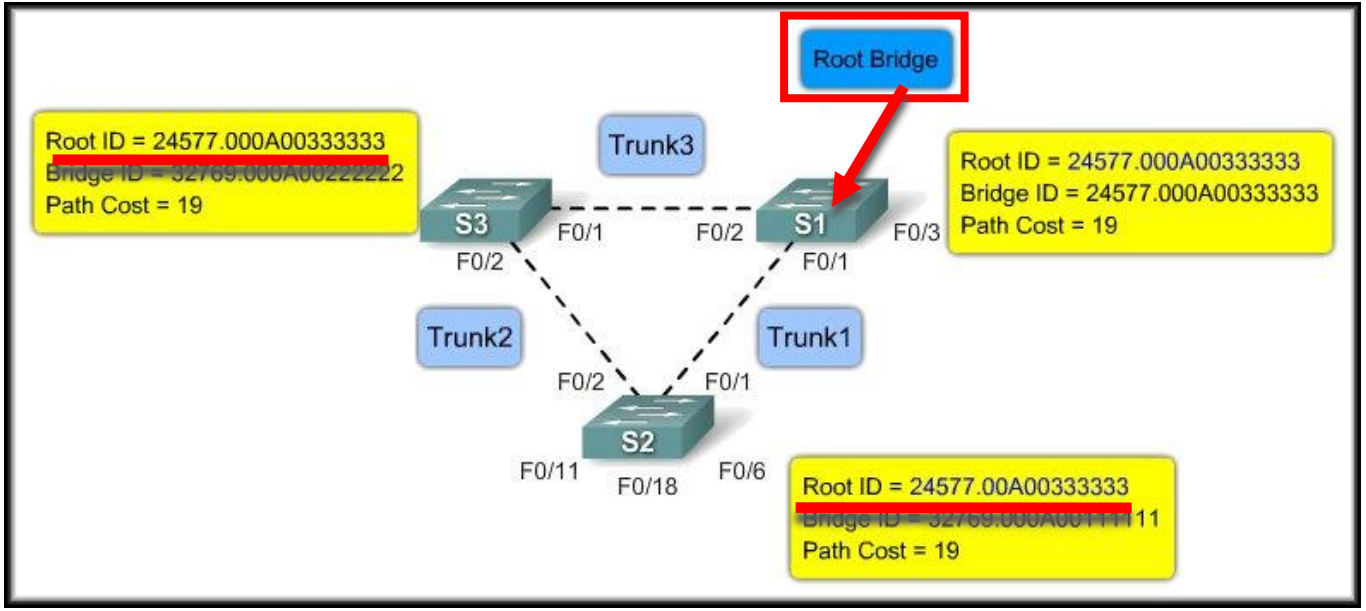

If the root bridge fails, the election process begins again.

© 2016 Cisco and/or its affiliates. All rights reserved. Cisco Confidential

STA Step 2 – Calculating Path Cost

- When the root bridge has been elected, the STA determines the best paths to the root bridge from all destinations in the broadcast domain.
  - sum of the individual port costs along the path from the destination to the root bridge.
- The default port costs are specified by the IEEE and defined by the operational bandwidth of the port

Link Speed	Cost
10Gbps	2
1Gbps	4
100Mbps	19
10Mbps	100

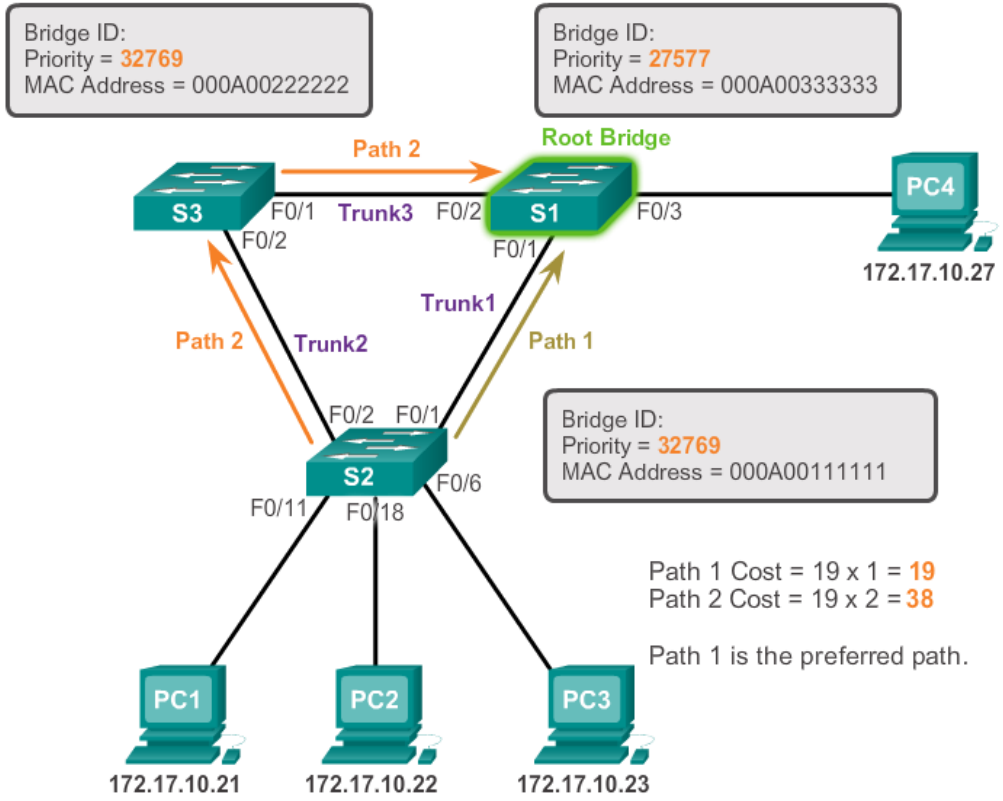

© 2016 Cisco and/or its affiliates. All rights reserved. Cisco Confidential

Spanning Tree Algorithm: Port Roles

- The location of the root bridge and priority values assigned to each individual switch port in the network topology determines how port roles are calculated.
- The following are STA port roles

  Root Port: The switch port with the lowest cost path to forward traffic to the root bridge.

  Designated Port: The switch port that receives and forwards frames toward the root bridge as needed. Only one designated port is allowed per segment.

  Non-designated Port: A switch port that is blocked, so it is not forwarding data frames.

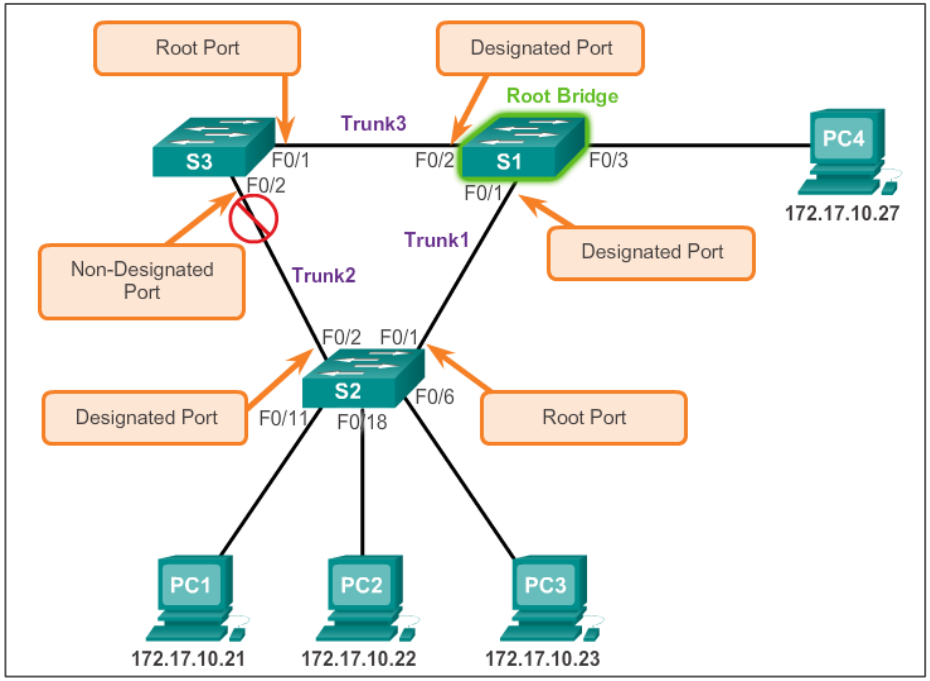

© 2016 Cisco and/or its affiliates. All rights reserved. Cisco Confidential

STA Step 3 – Selecting the Root Ports

- To determine the root port on a switch:
  - The switch compares the path costs on all switch ports participating in the spanning tree.
  - Port with lowest cost path to root bridge becomes root port

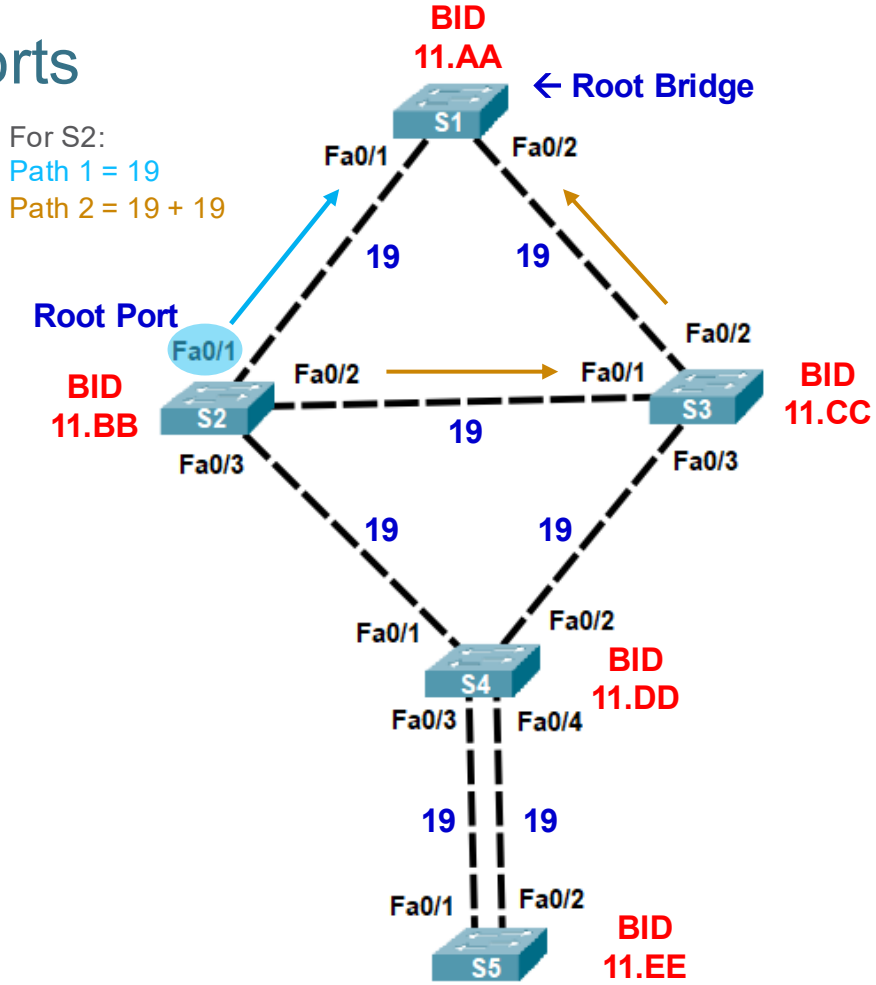

STA Step 3 – Selecting the Root Ports

- To determine the root port on a switch:
  - The switch compares the path costs on all switch ports participating in the spanning tree.
  - Port with lowest cost path to root bridge becomes root port

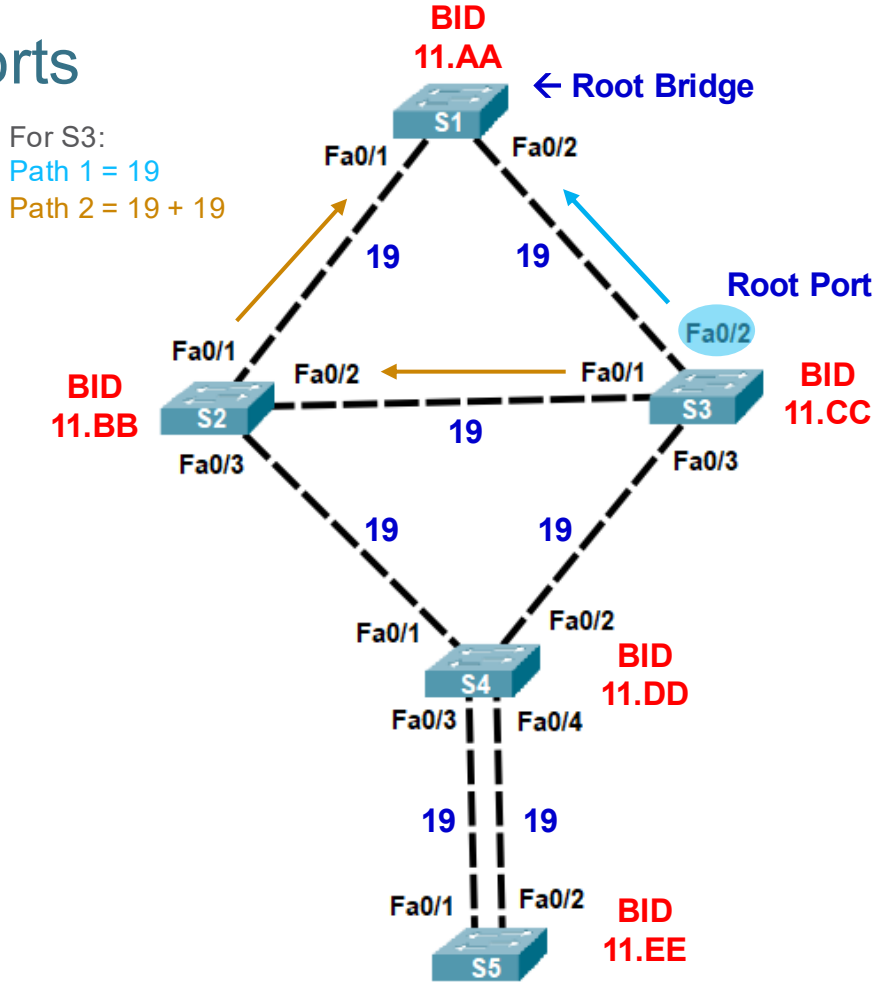

STA Step 3 – Selecting the Root Ports

- To determine the root port on a switch:
  - The switch compares the path costs on all switch ports participating in the spanning tree.
  - Port with lowest cost path to root bridge becomes root port
  - When there are two switch ports that have the same path cost to the root bridge:
    1. The port connected to an upstream (closer to root) switch with the lowest BID becomes root port

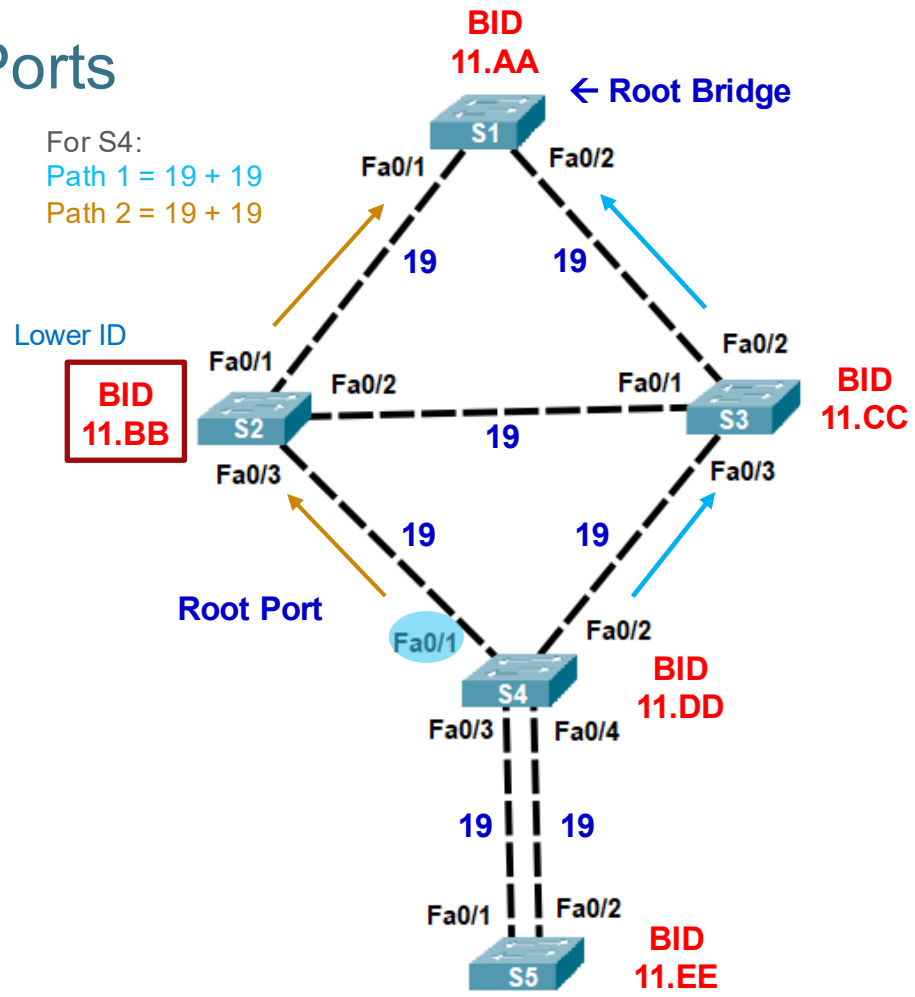

STA Step 3 – Selecting the Root Ports

- To determine the root port on a switch:
  - The switch compares the path costs on all switch ports participating in the spanning tree.
  - Port with lowest cost path to root bridge becomes root port
  - When there are two switch ports that have the same path cost to the root bridge:
    1. The port connected to an upstream (closer to root) switch with the lowest BID becomes root port
    2. Otherwise, the port connected to an upstream switch port with the lowest aggregated port priority and port ID value becomes root port

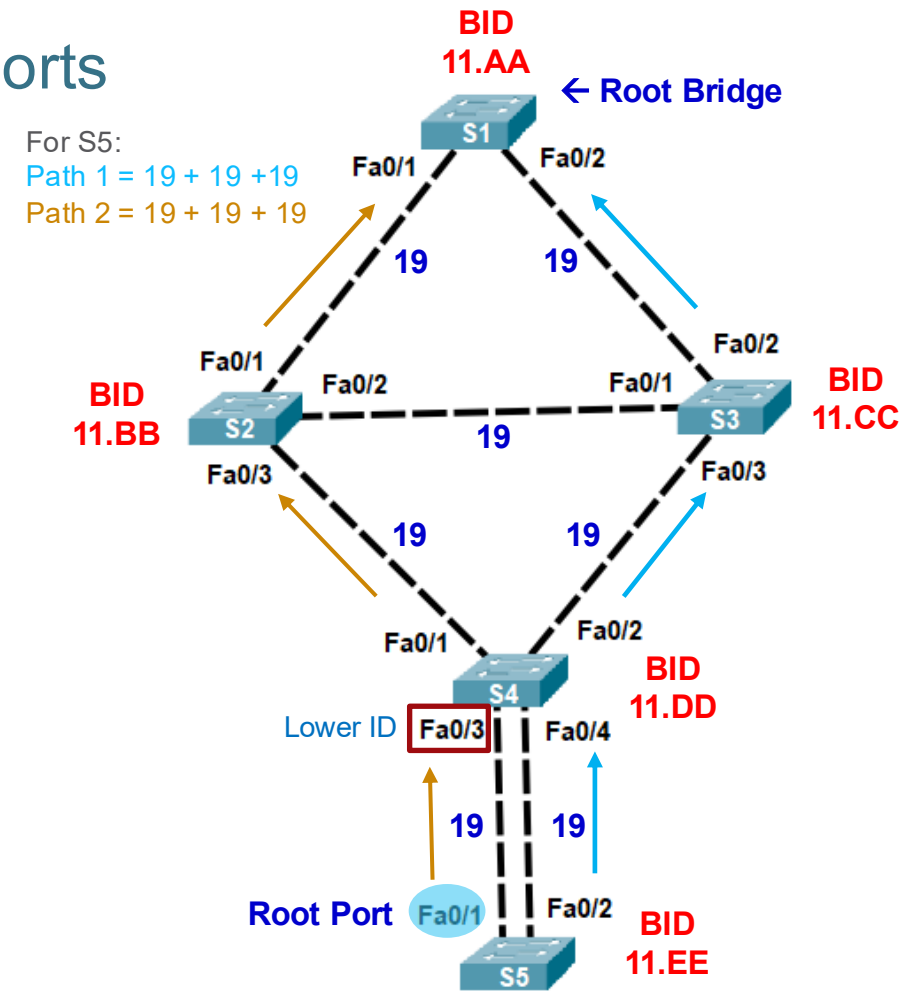

STA Step 4 and 5 – Selecting Designated and Alternate Ports

- Remaining non-root ports are assigned as designated (forwarding) ports and alternate (blocking) ports
- Ports on a switch that connect to root ports on an opposite switch become designated ports
- For segments with no root port:
  - The switch with a lower cost to the root takes the designated port while the opposite takes the non-designated port
  - If the 2 switches have equal cost paths to the root bridge, the port on the switch with the lower BID becomes a designated port, and the port on the opposite switch becomes a non-designated port

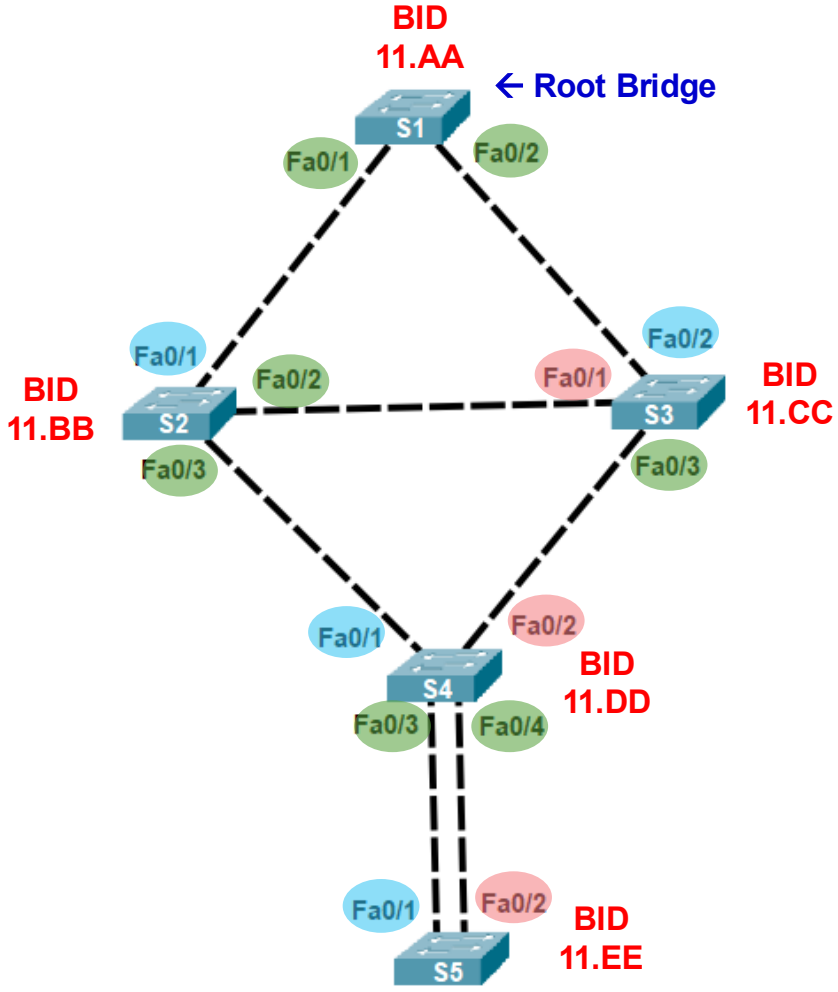

Operational Details of Each Port State

STP introduces the five port states which ports transition between:

Port State	BPDU	MAC Address Table	Forwarding Data Frames
Blocking	Receive only	No update	No
Listening	Receive and send	No update	No
Learning	Receive and send	Updating table	No
Forwarding	Receive and send	Updating table	Yes
Disabled	None sent or received	No update	No

© 2016 Cisco and/or its affiliates. All rights reserved. Cisco Confidential

Port States and BPDU Timers

- BPDU Timers:
  - The amount of time that a port stays in the various port states depends on the BPDU timers.
  - Only the switch in the role of root bridge may send information through the tree to adjust the timers.
    - Hello Time - Interval between BPDUs (2 secs default)
    - Forward Delay - Time spent in listening and learning state (15 secs default)
    - Maximum Age - Max time that a switch port waits for a BPDU (20 secs default)

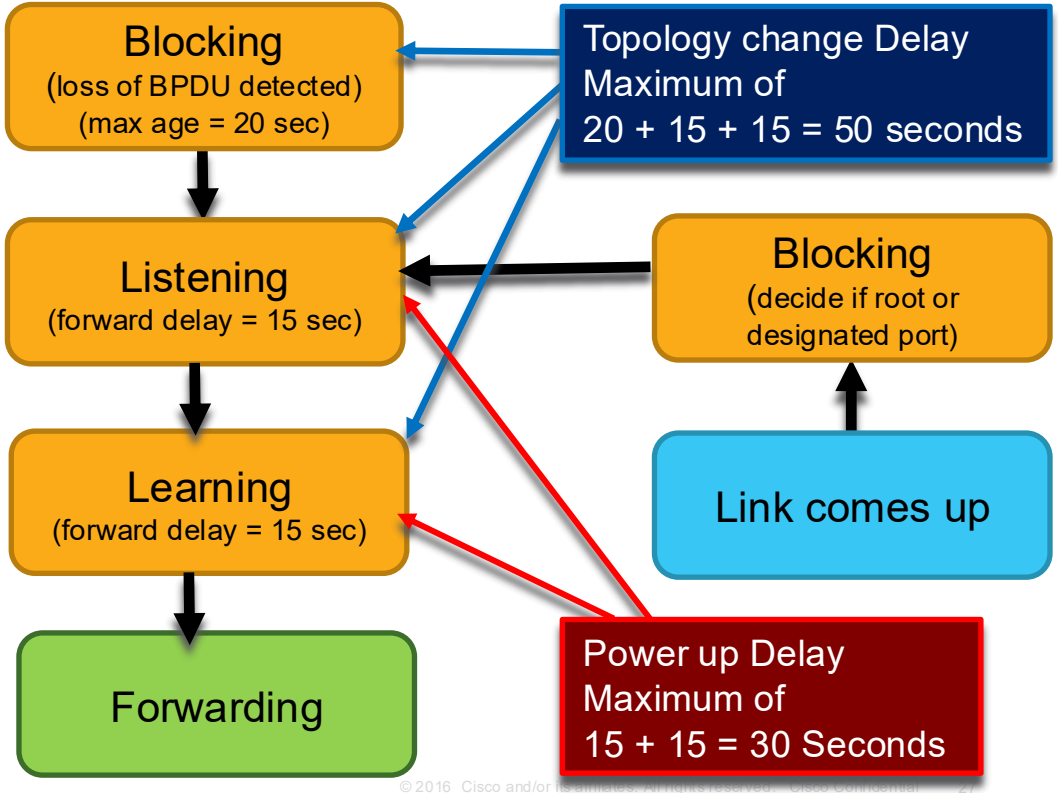

© 2016 Cisco and/or its affiliates. All rights reserved. Cisco Confidential

Different Versions of STP

- Currently, the terms “spanning tree” and “STP” may refer to the different varieties of the spanning tree algorithm implemented on switches

STP Variety	Description
STP	Original IEEE 802.1D version. Assumes one spanning tree instance for the entire bridged network, regardless of the number of VLANs.
Per-VLAN Spanning Tree (PVST+)	Cisco implementation of STP that provides a separate 802.1D spanning tree instance for each VLAN configured in the network
Rapid Spanning Tree Protocol (RSTP)	IEEE 802.1w is an evolution of STP that provides faster convergence than STP.
Rapid PVST+	Cisco implementation of RSTP that provides a separate instance of 802.1w per VLAN.
Multiple Spanning Tree Protocol (MSTP)	IEEE standard that can map multiple VLANs into the same spanning tree instance.
Multiple Spanning Tree (MST)	Cisco implementation of MSTP that can provides up to 16 instances of RSTP and combines many VLANs with the same physical and logical topology into a common RSTP instance..

© 2016 Cisco and/or its affiliates. All rights reserved. Cisco Confidential

2.3 Per VLAN Spanning Tree

© 2016 Cisco and/or its affiliates. All rights reserved. Cisco Confidential

Overview of PVST+

- Original 802.1D defines a common spanning tree
  - One spanning tree instance for the switched network (no matter how many VLANs)
  - No load sharing
  - One uplink must block for all VLANs
  - Low CPU utilization because only one instance of STP is used/calculated

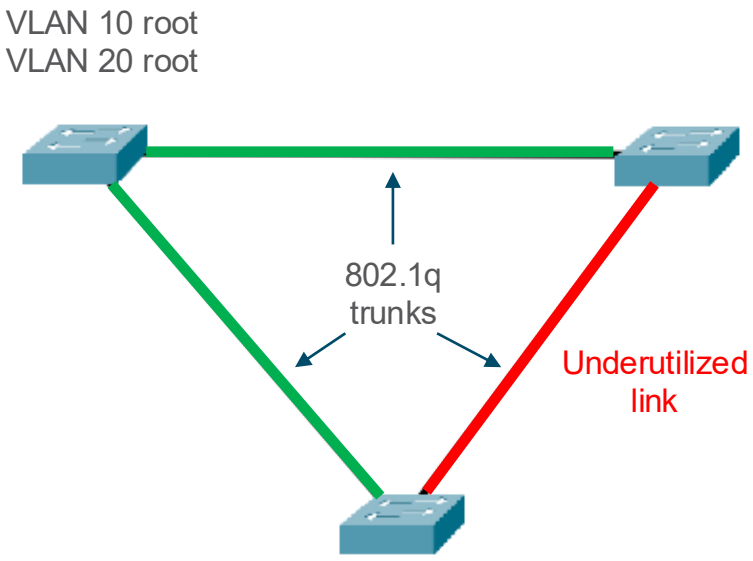

© 2016 Cisco and/or its affiliates. All rights reserved. Cisco Confidential

Overview of PVST+

- Original 802.1D defines a common spanning tree
  - One spanning tree instance for the switched network (no matter how many VLANs)
  - No load sharing
  - One uplink must block for all VLANs
  - Low CPU utilization because only one instance of STP is used/calculated
- Cisco PVST+ - each VLAN has its own independent spanning tree instance
  - One port can be blocking for one VLAN and forwarding for another VLAN
  - Can load balance
  - Can stress the CPU if a large number of VLANs are used

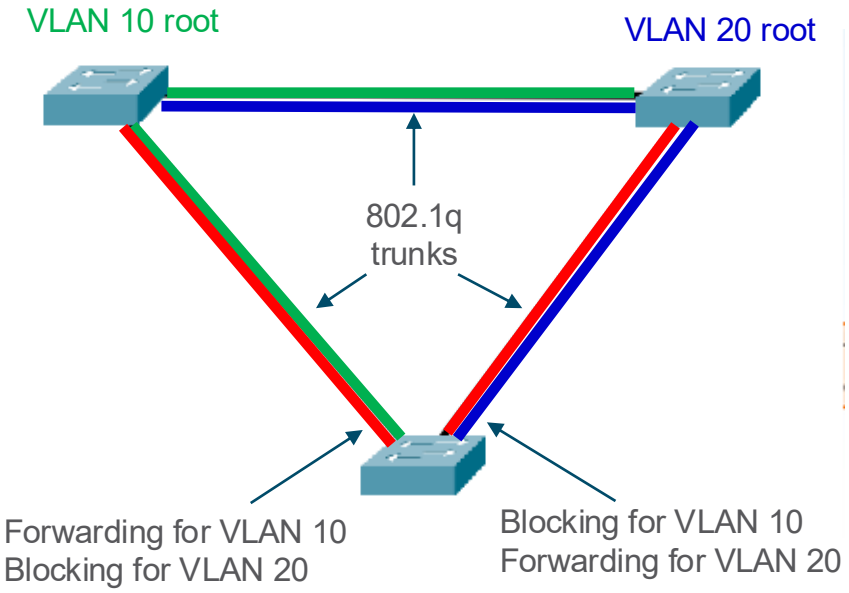

© 2016 Cisco and/or its affiliates. All rights reserved. Cisco Confidential

Extended System ID and PVST+ Operation

- To support an independent spanning tree instance per VLAn, PVST+ uses part of the bridge priority field as the VLAN ID:
  - The addition of the VLAN ID leaves fewer bits available for the bridge priority (4 instead of 16).
  - As a result, the bridge priority can be assigned only in multiples of 4096.
  - The priority is added to the extended system ID (VLAN ID) to uniquely identify the priority and VLAN of the BPDU frame.

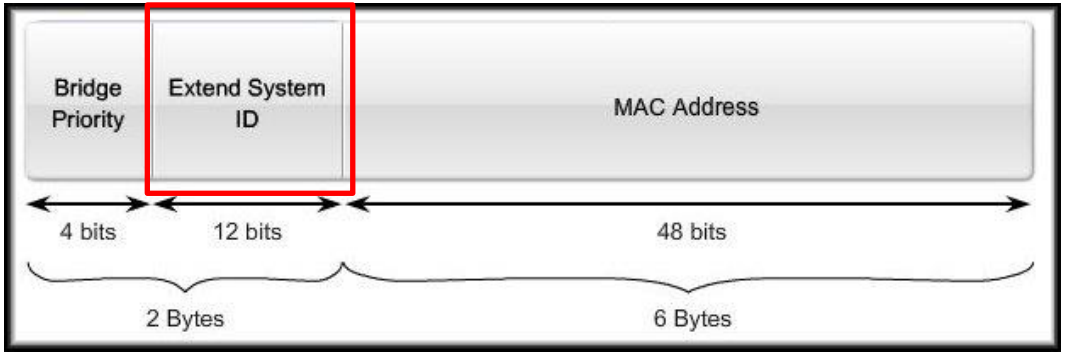

© 2016 Cisco and/or its affiliates. All rights reserved. Cisco Confidential

Verifying STP Status

Default STP settings for Cisco switches

Feature	Default Setting
Enable state	Enabled on VLAN 1
Spanning-tree mode	PVST+
Switch priority	32768
Spanning-tree VLAN port priority (configurable on a per-VLAN basis)	128
Spanning-tree VLAN port cost (configurable on a per-VLAN basis)	1000 Mb/s: 4 100 Mb/s: 19 10 Mb/s: 100
Spanning-tree timers	Hello time: 2 seconds Forward-delay time: 15 seconds Maximum-aging time: 20 seconds Transmit hold count: 6 BPDUs

© 2016 Cisco and/or its affiliates. All rights reserved. Cisco Confidential

Verifying PVST+ Status

show spanning-tree [vlan *vlan-id*] command is used to output the current spanning tree/s of the switch

```
Switch#show spanning-tree
VLAN0001
  Spanning tree enabled protocol ieee
  Root ID    Priority    32769
             Address     0001.C9AA.C4AA
             Cost        19
             Port        2(FastEthernet0/2)
             Hello Time  2 sec  Max Age 20 sec  Forward Delay 15 sec

  Bridge ID  Priority    32769  (priority 32768 sys-id-ext 1)
             Address     0060.3E9B.1427
             Hello Time  2 sec  Max Age 20 sec  Forward Delay 15 sec
             Aging Time  20

Interface        Role Sts Cost      Prio.Nbr Type
---------------- ---- --- --------- -------- -------------------------------
Fa0/1            Desg FWD 19        128.1    P2p
Fa0/2            Root FWD 19        128.2    P2p
Fa0/3            Desg FWD 19        128.3    P2p
```

Manipulating the Spanning Tree

- By default, Cisco switches that are connected together will already have PVST+ enabled and will calculate their spanning tree on their own
- An automatically calculated spanning tree will not always produce the most efficient paths for packets in a network

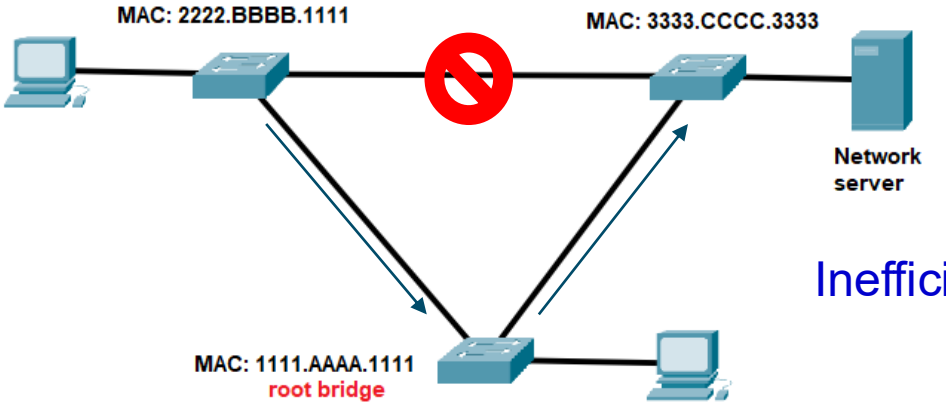

Inefficient path to server!

- To manipulate the network spanning tree for path optimization and load balancing, bridge IDs and port priorities may be manually adjusted in order to influence the root bridge election and switch port role assignments.

© 2016 Cisco and/or its affiliates. All rights reserved. Cisco Confidential

Adjusting the Bridge ID

- The bridge priority is often manually set to assign a particular switch as the primary or secondary (backup) root bridge of the LAN
  - Primary root – active root bridge (lowest BID in the network)
  - Secondary root – backup root bridge in case primary fails (2nd lowest BID)
- Reasons for choosing a switch as root:
    - Switch is positioned such that most traffic patterns flow toward this particular switch
    - Switch has more processing power (better CPU)
    - Switch is easier to access and manage remotely
  - Two methods to configure the bridge ID
    - Method 1: Manually setting the bridge priority
    - Method 2: Using automatic priority adjustment

© 2016 Cisco and/or its affiliates. All rights reserved. Cisco Confidential

Adjusting the Bridge ID – Method 1

- To manually set the bridge priority, specify the VLAN ID of the spanning tree to adjust and the priority value to be assigned (multiple of 4096)

```
Switch(config)# spanning-tree vlan vlan_id priority value
```

- Example:

```
S2(config)# spanning-tree vlan 10 priority 4096
```

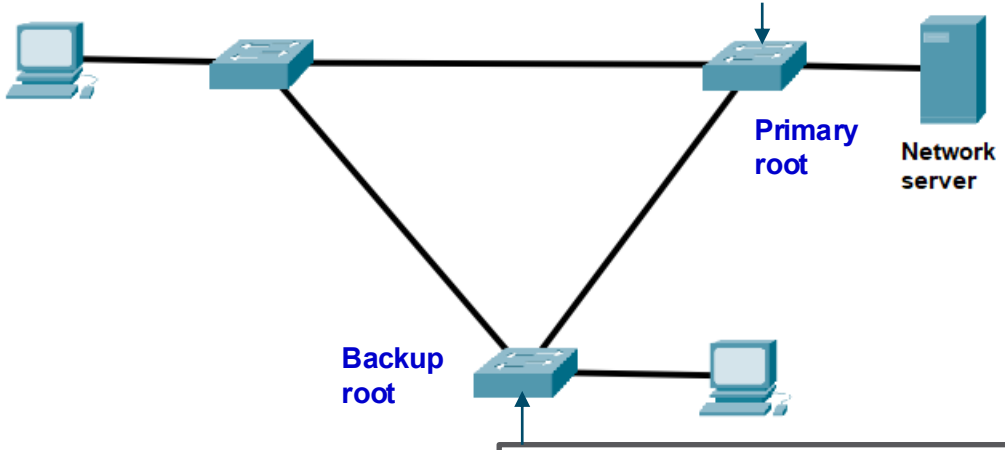


```
S3(config)# spanning-tree vlan 10 priority 8192
```

Adjusting the Bridge ID – Method 2

- To allow the switches to automatically calculate bridge priority, use the primary / secondary keyword.
- Recommended only if all switches are still at default priority

```
Switch(config)# spanning-tree vlan vlan_id root [primary/secondary]
```

- Example:

```
S2(config)# spanning-tree vlan 10 root primary
```

Auto set priority to current lowest priority in network -4096

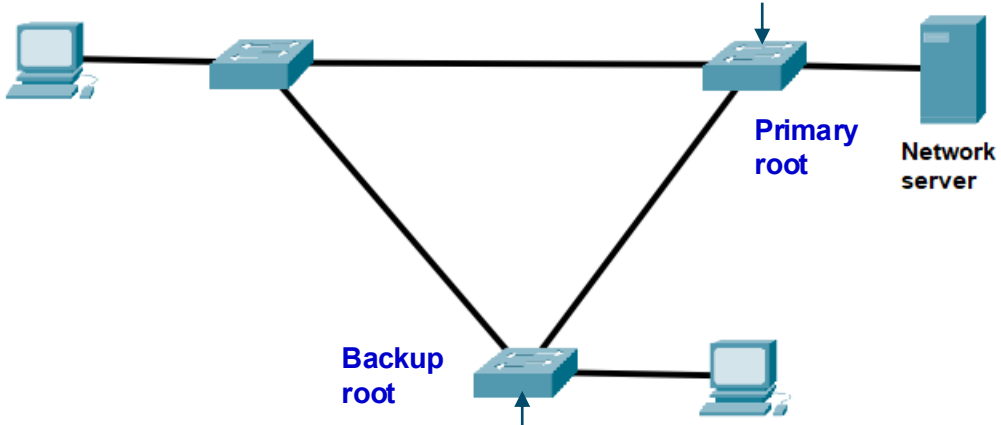

Auto set priority to 28672

```
S3(config)# spanning-tree vlan 10 root secondary
```

Adjusting Port Priority

- For LAN topologies with redundant links between the same pair of switches, all ports have the same priority by default and selection of the downstream switch root port is based on port ID only
- The port priority of an upstream switch can be adjusted by multiples of 16 to manipulate the root port assignment of the connected downstream switch

```
Switch(config-if)# spanning-tree vlan vlan_id port-priority value
```

- Example: Balance the load of VLAN 10 and 20 between the 2 switch links. VLAN 10 traffic will use Fa0/7 of S2; while VLAN 20 traffic will use Fa0/8

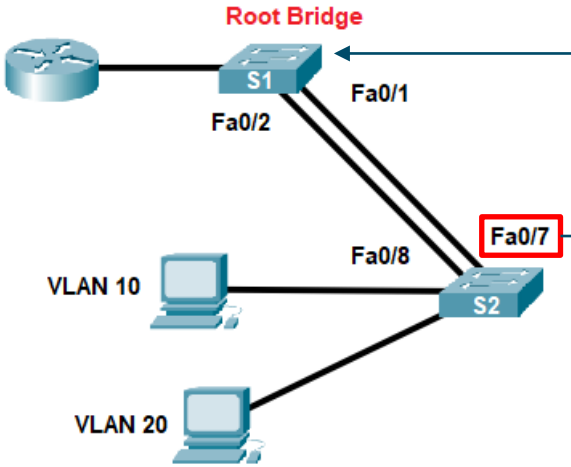


```
S1(config)# interface Fa0/1
S1(config-if)# spanning-tree vlan 10 port-priority 16
S1(config-if)# spanning-tree vlan 10 port-priority 32
S1(config)# interface Fa0/2
S1(config-if)# spanning-tree vlan 10 port-priority 32
S1(config-if)# spanning-tree vlan 10 port-priority 16
```

© 2016 Cisco and/or its affiliates. All rights reserved. Cisco Confidential

PortFast

- BPDU timer delays can affect DHCP.
  - A network device is often booted and ready to use the network before the switch port becomes active.
  - This can prevent the device from immediately obtaining a useable IP configuration from DHCP.
- The PortFast setting is used on access ports intended for end devices to allow the port to transition immediately to the forwarding state.
  - To enable globally: `Switch(config) # spanning-tree portfast default`
  - To enable per interface: `Switch(config-if) # spanning-tree portfast`

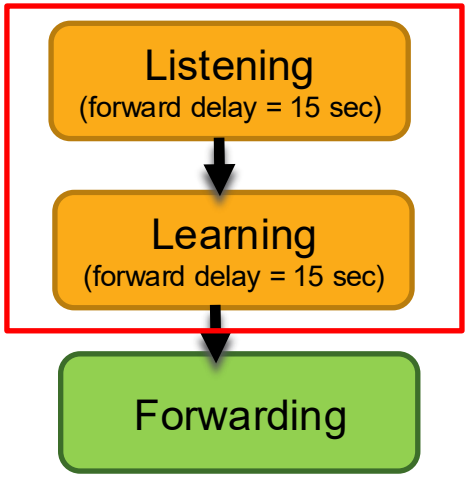

© 2016 Cisco and/or its affiliates. All rights reserved. Cisco Confidential

PortFast Configuration

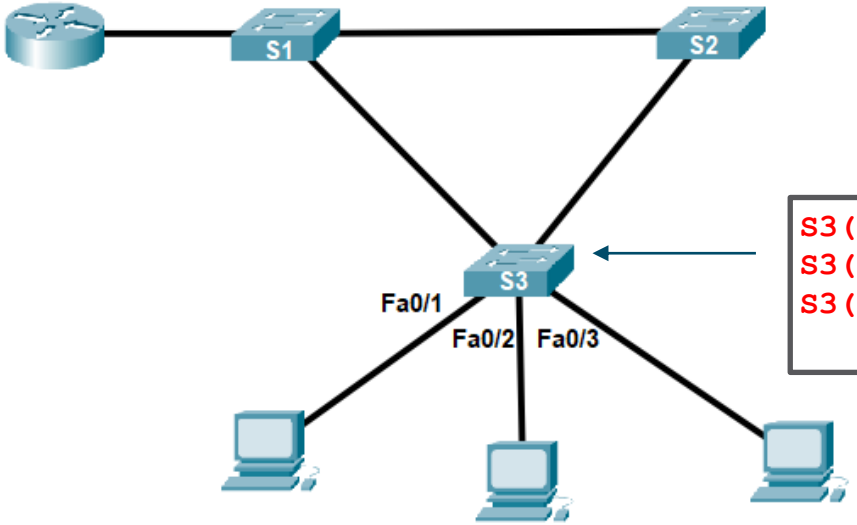


```
S3(config)# interface range Fa0/1-3
S3(config-if-range)# switchport mode access
S3(config-if-range)# spanning-tree portfast
```

- Note: Portfast should not be enabled on ports connected to another switch as this can create a spanning-tree loop.

© 2016 Cisco and/or its affiliates. All rights reserved. Cisco Confidential

2.4 Rapid PVST+

© 2016 Cisco and/or its affiliates. All rights reserved. Cisco Confidential

Overview of Rapid STP

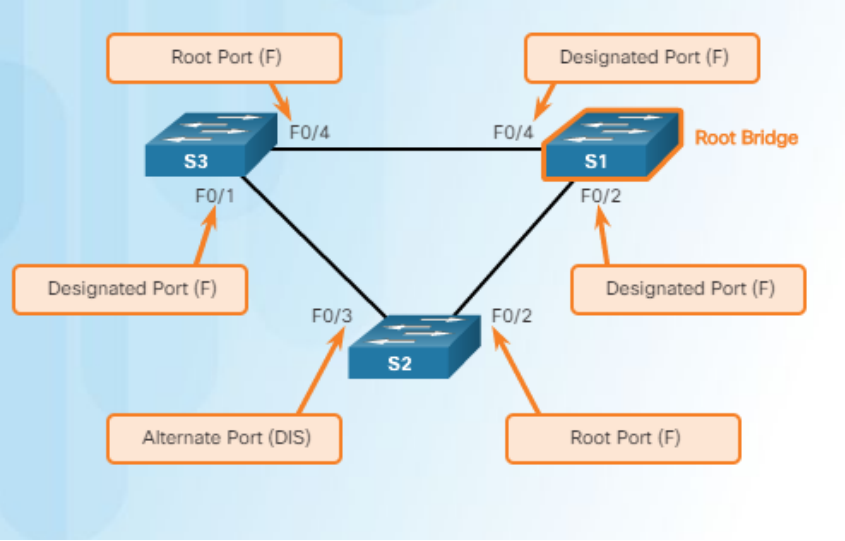

- RSTP (IEEE 802.1w) supersedes the original 802.1D by increasing the speed of spanning tree calculation while retaining backward compatibility.
  - Faster convergence and response to topology changes using a proposal and agreement process between switches
  - Most parameters and terminologies are the same as STP
  - Differences from STP are in new port types and port states.
- Rapid PVST+ is the Cisco version of RSTP which uses an independent RSTP instance per VLAN (similar to PVST+)

© 2016 Cisco and/or its affiliates. All rights reserved. Cisco Confidential

RSTP Port Roles

- Root ports and designated ports are the same for both STP and RSTP.
- In RSTP, blocking ports are further categorized as Alternate and Backup ports
  - Alternate port - alternate path to the root bridge that can immediately transition to a root port if the original root port fails
  - Backup port - backup to a shared medium, such as a hub (rarely used nowadays)

STP	RSTP
Root Port	Root Port
Designated Port	Designated Port
Blocked Port (Non-Designated Port)	Backup Port
	Alternate Port

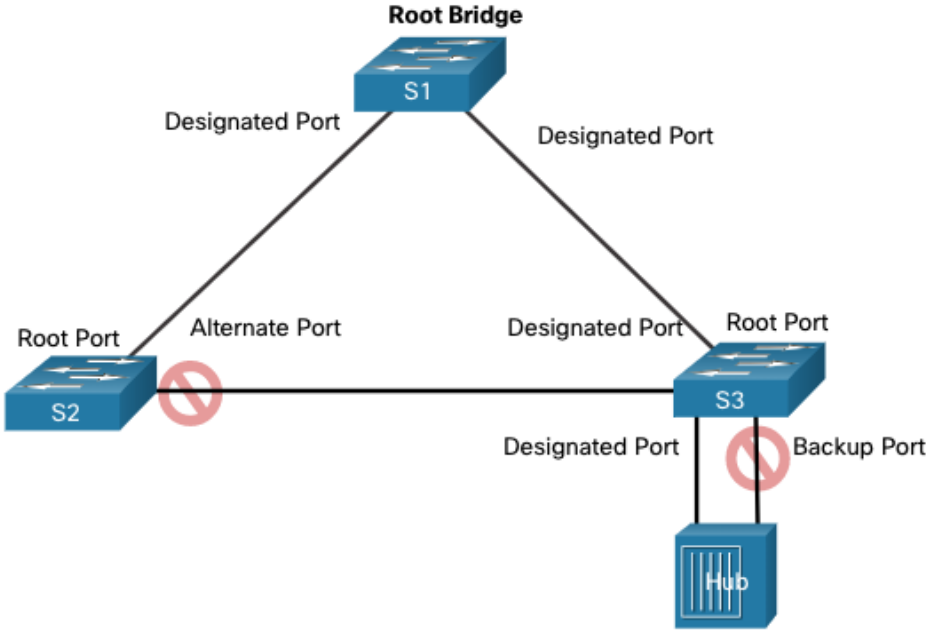

© 2016 Cisco and/or its affiliates. All rights reserved. Cisco Confidential

RSTP Port States

- There are only three port states in RSTP that correspond to the three possible operational states in STP.
  - Discarding: Prevents the forwarding of data frames.
  - Learning: Accepts data frames to populate the MAC table.
  - Forwarding: Forwards data frames and determines the topology.
- With RSTP, the role of a port is separated from the state of a port.
- Port roles and port states are able to transition independently of each other depending on the current state of the spanning tree calculation.

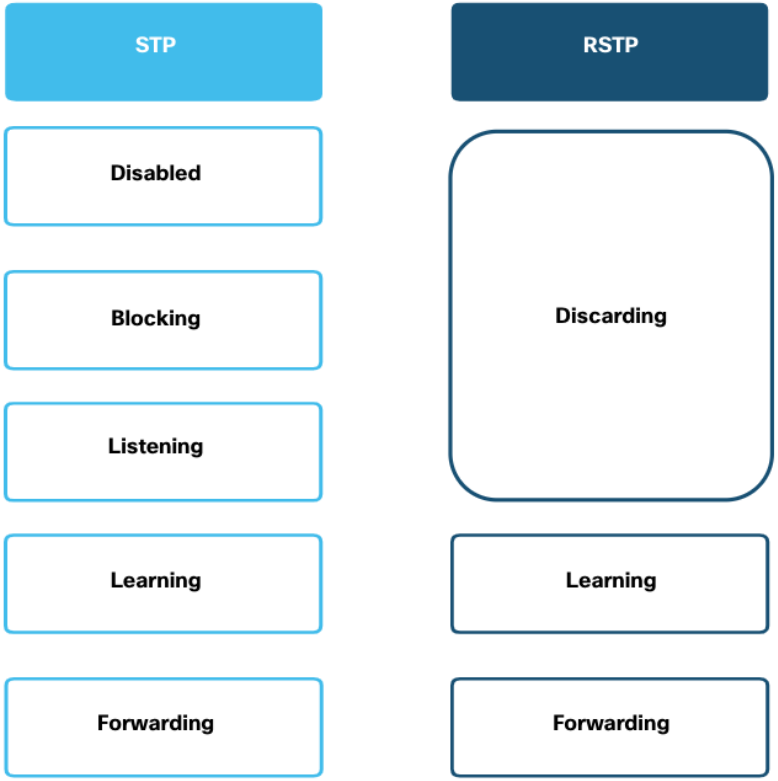

© 2016 Cisco and/or its affiliates. All rights reserved. Cisco Confidential

RSTP Proposal and Agreement Process

- In IEEE 802.1D STP / PVST+:
  - A designated port must wait two times the forward delay before transitioning the port to the forwarding state.
  - Convergence and response to topology changes can take 30+ seconds to complete
- RSTP / Rapid PVST+:
  - Significantly speeds up the recalculation process after a topology change.
  - It converges on a link-by-link basis using an active proposal-agreement process through exchange of BPDUs between switches to confirm the final state of a link
  - Does not rely on timers expiring before ports can transition.
  - Can adjust the spanning tree and converge within milliseconds

© 2016 Cisco and/or its affiliates. All rights reserved. Cisco Confidential

Overview of Rapid PVST+

- Rapid PVST+ is the Cisco version of RSTP which uses an independent RSTP instance per VLAN (similar to PVST+) → Is essentially PVST+ using RSTP operations
- Backwards compatible with PVST+ due to similar BPDU format
- Can be enabled using the command

```
Switch(config)# spanning-tree mode rapid-pvst
```

- Shares a similar set of configuration commands as PVST+ for bridge and port priority adjustment
  - `Switch(config)# spanning-tree vlan vlan_id priority value`
  - `Switch(config)# spanning-tree vlan vlan_id root [primary/secondary]`
  - `Switch(config-if)# spanning-tree vlan vlan_id port-priority value`
  - `Switch(config-if)# spanning-tree portfast`

© 2016 Cisco and/or its affiliates. All rights reserved. Cisco Confidential

Configuring Rapid PVST+

- Example: Configure Rapid PVST+ for VLAN 100 in the network as indicated

```
S1(config)# spanning-tree mode rapid-pvst
S1(config)# spanning-tree vlan 100 root primary
```

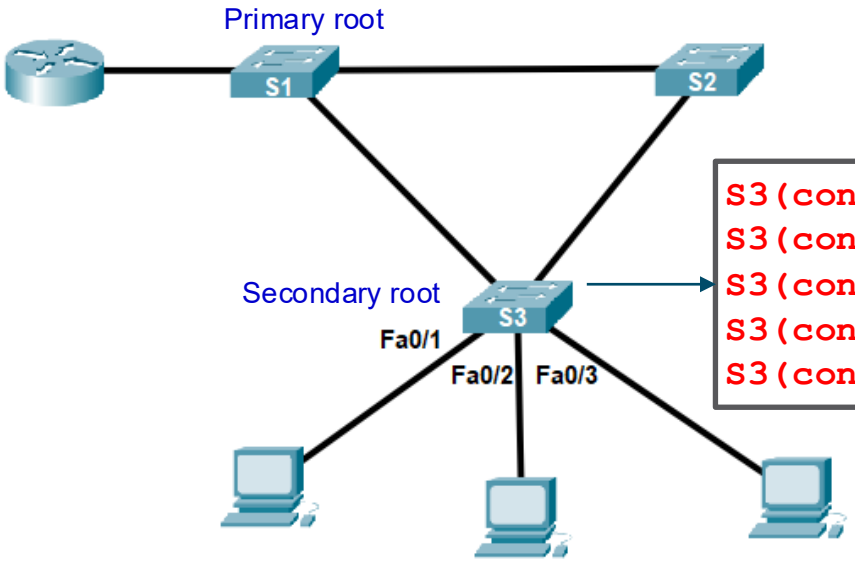


```
S3(config)# spanning-tree mode rapid-pvst
S3(config)# spanning-tree vlan 100 root secondary
S3(config)# interface range fa0/1-3
S3(config-if-range)# switchport mode access
S3(config-if-range)# spanning-tree portfast
```


© 2016 Cisco and/or its affiliates. All rights reserved. Cisco Confidential

Verifying Rapid PVST+

show spanning-tree [vlan *vlan-id*] command is also used to output the current Rapid-PVST+ trees of the switch

```
Switch3#show spanning-tree vlan 100
VLAN0100
  Spanning tree enabled protocol rstp
  Root ID    Priority    24676
             Address     0001.6392.9527
             Cost        19
             Port        23(FastEthernet0/23)
             Hello Time  2 sec  Max Age 20 sec  Forward Delay 15 sec

  Bridge ID  Priority    28772  (priority 28672 sys-id-ext 100)
             Address     0004.9A21.0645
             Hello Time  2 sec  Max Age 20 sec  Forward Delay 15 sec
             Aging Time  20

Interface        Role Sts Cost      Prio.Nbr Type
---------------- ---- --- --------- -------- --------------------------------
Fa0/23           Root FWD 19        128.23   P2p
Fa0/24           Desg FWD 19        128.24   P2p
```

© 2016 Cisco and/or its affiliates. All rights reserved. Cisco Confidential

STP Vulnerabilities

- Network attackers can manipulate the Spanning Tree Protocol (STP) to conduct an attack by spoofing the root bridge and changing the topology of a network. Attackers can then capture all traffic for the immediate switched domain.

- To conduct an STP manipulation attack, the attacking host broadcasts STP bridge protocol data units (BPDUs) containing configuration and topology changes that will force spanning-tree recalculations.

- The BPDUs sent by the attacking host announce a lower bridge priority in an attempt to be elected as the root bridge.

© 2016 Cisco and/or its affiliates. All rights reserved. Cisco Confidential

BPDU Guard

- To mitigate STP attacks, use Bridge Protocol Data Unit (BPDU) Guard on access ports intended for connection to end user devices:
- BPDU Guard prevents a rogue or spoofed switch from gaining network access by error-disabling a port that receives a BPDU. ‘
- BPDU Guard configuration
  - To enable globally: `Switch(config) # spanning-tree portfast bpduguard default`
  - To enable per interface: `Switch(config-if) # spanning-tree bpduguard enable`

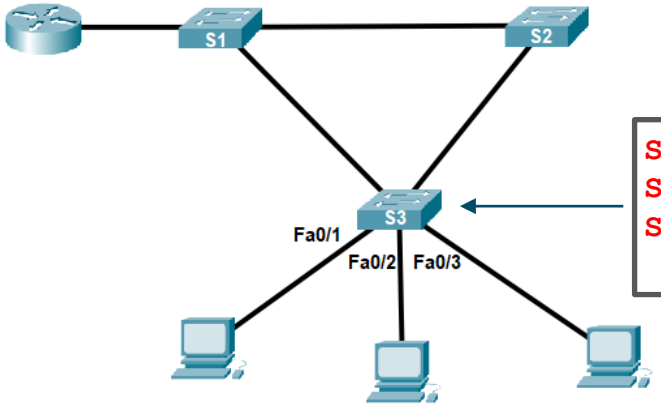


```
S3(config)# interface range Fa0/1-3
S3(config-if-range)# switchport mode access
S3(config-if-range)# spanning-tree bdpuguard enable
```

© 2016 Cisco and/or its affiliates. All rights reserved. Cisco Confidential

Questions?

What did you learn in this module?

- Redundant paths in a switched Ethernet network may cause both physical and logical Layer 2 loops which can lead to MAC table instability and broadcast storms
- STP is a loop-prevention network protocol that allows for redundancy while creating a loop-free Layer 2 topology using a five-step process:
  - Elect the switch with the lowest BID as root bridge
  - Calculate cost to root based on bandwidth of each link
  - On each switch, select the port having the least cost path to the root bridge as the root port
  - Select non-root ports that need to forward frames as designated ports
  - Select non-root ports that need to block frames as non-designated ports.
- Port states are blocking, listening, learning, forwarding, and disabled.
- STP convergence requires three timers to manage the timing for BPDU sending and port state transitioning: the hello timer, the forward delay timer, and the max age timer.

© 2016 Cisco and/or its affiliates. All rights reserved. Cisco Confidential

What did you learn in this module?

- PVST+ is a Cisco enhancement of STP that provides a separate spanning tree instance for each VLAN configured in the network by using part of the BPDU bridge priority field as the VLAN ID
- Using PVST+, bridge priority and port priority may be adjusted independently per VLAN
- Portfast is a feature used on access ports which allows a port to transition immediately to forwarding state
- RSTP is an evolution of STP that provides faster convergence than STP
  - Uses 3 port states: Forwarding, Learning Discarding
  - Uses 4 port roles: Root Port, Designated Port, Alternate Port, Backup Port
  - Uses a proposal-agreement process to speed up STP calculation
- Rapid-PVST+ is a Cisco enhancement of RSTP that provides a separate spanning tree instance for each VLAN configured in the network
- The BPDU guard feature on Cisco switches immediately puts the switch port in an error-disabled state upon receipt of any BPDU to protect against potential loops.

© 2016 Cisco and/or its affiliates. All rights reserved. Cisco Confidential

CISCO